This document is the property of Amphenol Corporation and is delivered on the express condition that it is not to be disclosed, reproduced or used, in whole or in part, for manufacture or sale by anyone other than Amphenol Corporation without its prior consent, and that no right is granted to disclose or to use any information in this document.

The marking on this product doesn't contain environmental hazardous material and must follow one or more specifications per Material Specification SS-00259 for Sony GP compliant or per directive 2002/95/EC for RoHS compliant or per IEC 61249-2-21 for Halogen Free compliant.

PRELIMINARY RELEASE SUBJECT TO CHANGE

REVISIONS				
SYM	ECN No.	DESCRIPTION	DATE	BY
AX1		UNAPPROVED REVISION	09/28/2011	Chenny Yeh
AX2		ADD DATE CODE	10/12/2011	Chenny Yeh
AX3		MODIFIED P/N SYSTEM	12/01/2011	Chenny Yeh
AX4		ADD POST DIM	12/14/2011	Chenny Yeh

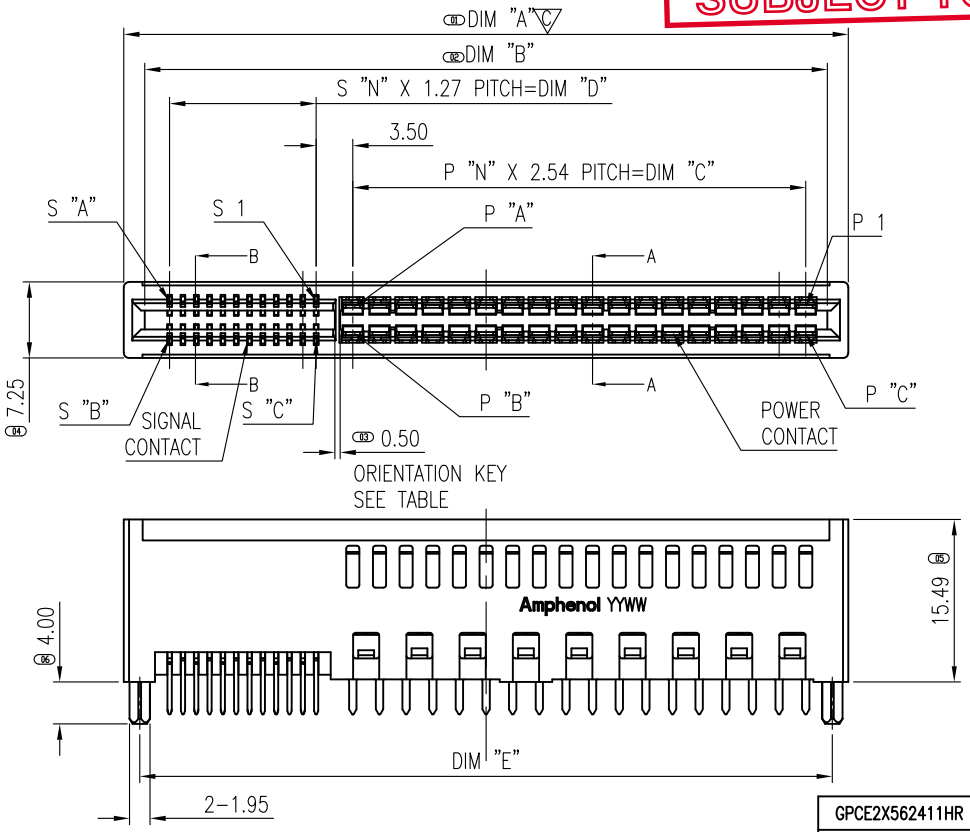

P/N SYSTEM:

GPCE 2 X X X X X 1 X HR

CONTACT FINISH:
- 0: GOLD FLASH
- 1: 5u" GOLD
- 2: 10u" GOLD
- 3: 15u" GOLD
- 4: 30u" GOLD

POWER PIN Q"TY:
- 08: 8 PIN
- 36: 36 PIN
- 48: 48 PIN
- 56: 56 PIN

SIGNAL PIN Q"TY
- 12: 12 PIN
- 20: 20 PIN
- 24: 24 PIN

VARIATION CODE:
- BLANK: STANDARD
- 1: WITHOUT ORIENTATION KEY

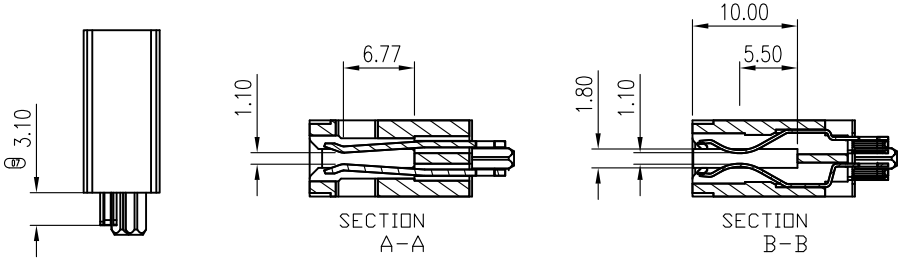

PART NUMBER	ORIENTATION KEY	P "N"	S "N"	DIM "A"	DIM "B"	DIM "C"	DIM "D"	DIM "E"	P "A"	P "B"	P "C"	S "A"	S "B"	S "C"
GPCE2X562411HR	NO	27	11	94.48	90.48	58.42	13.97	91.44	P28	P29	P56	S12	S13	S24
GPCE2X56241HR	YES	27	11	94.48	90.48	58.42	13.97	91.44	P28	P29	P56	S12	S13	S24
GPCE2X481211HR	NO	23	5	76.70	72.70	58.42	6.35	73.66	P24	P25	P48	S6	S7	S12
GPCE2X48121HR	YES	23	5	76.70	72.70	58.42	6.35	73.66	P24	P25	P48	S6	S7	S12
GPCE2X362411HR	NO	17	11	69.08	65.08	66.04	13.97	66.04	P18	P19	P36	S12	S13	S24
GPCE2X36241HR	YES	17	11	69.08	65.08	66.04	13.97	66.04	P18	P19	P36	S12	S13	S24
GPCE2X082011HR	NO	3	9	30.98	26.98	7.62	11.43	27.94	P4	P5	P8	S10	S11	S20
GPCE2X08201HR	YES	3	9	30.98	26.98	7.62	11.43	27.94	P4	P5	P8	S10	S11	S20

NOTES:
1. MATERIAL:
   HOUSING: HIGH TEMPERATURE THERMO PLASTIC UL94V-0 COLOR BLACK
   TERMINAL: HIGH PERFORMANCE COPPER ALLOY
2. FINISH:
   TERMINAL:
   CONTACT AREA: SELECTIVE GOLD PL.
   SOLDERING AREA: MATT TIN PL. 120 μ" THK MIN.
   UNDER PL.: NICKEL PL. 50 μ" THK MIN.
3. THIS PRODUCT DOESN'T CONTAIN ENVIRONMENTAL HAZARDOUS MATERIALS PER DIRECTIVE 2002/95/EC FOR RoHS AND PER IEC 61249-2-21 FOR HALOGEN FREE COMPLIANT.
4. THE DIMENSIONS MARKED No WILL BE CHECKED BY Q.C. AND PROCESS ENGINEERS.

TOLERANCE	APPROVALS	DATE	TITLE			
X.	DRAWN		ENERGY EDGE RECEPTACLE,DIP TYPE			Amphenol® Amphenol Corporation Amphenol Taiwan Corporation
X.X ±0.30	DESIGNED					
X.XX ±0.20	CHECKED					
X.XXX ±0.10	APPROVED		UNIT mm	SIZE A3	PART No. GPCE2XXXXX1HR	
ANGULAR ±2°						
UNLESS OTHERWISE SPECIFIED	DWG TYPE CST DWG	PROJECT CODE T521	SCALE NA	SHEET 1 OF 3	DWG No. GPCE2X36241HR	REV. AX4

on the express condition that it is not to be disclosed, reproduced or used, in whole or in part, for manufacture or sale by anyone other than Amphenol Corporation without its prior consent, and that no right is granted to disclose or to use any information in this document.

The marking on this product doesn't contain environmental hazardous material and must follow one or more specifications per Material Specification SS-00259 for Sony GP compliant or per directive 2002/95/EC for RoHS compliant or per IEC 61249-2-21 for Halogen Free compliant.

PRELIMINARY RELEASE SUBJECT TO CHANGE

REVISIONS				
SYM	ECN No.	DESCRIPTION	DATE	BY
AX1		UNAPPROVED REVISION	09/28/2011	Chenny Yeh
AX2		ADD DATE CODE	10/12/2011	Chenny Yeh
AX3		MODIFIED P/N SYSTEM	12/01/2011	Chenny Yeh
AX4		ADD POST DIM	12/14/2011	Chenny Yeh

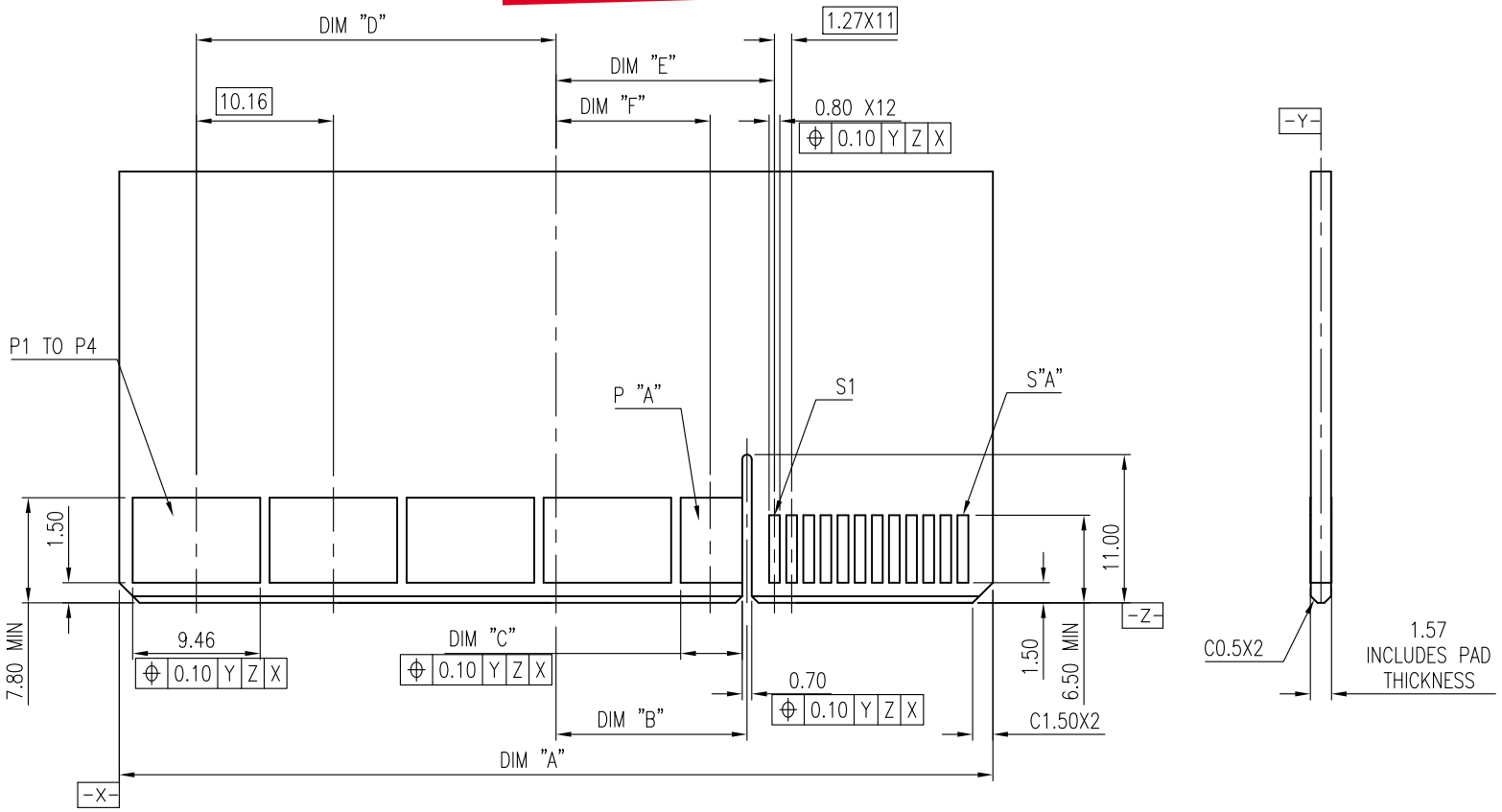

RECOMMENDED MATING BOARD FOOTPRINT

GPCE2X56241HR	90.18	26.86	9.46	39.37	28.90	21.59	P28	S12
GPCE2X48121HR	72.40	25.59	9.46	30.48	27.63	20.42	P24	S6
GPCE2X36241HR	64.78	14.61	4.57	26.67	16.2	11.43	P18	S12
GPCE2X08201HR	26.49	2.45		7.52	0.40			S10
PART NUMBER	DIM "A"	DIM "B"	DIM "C"	DIM "D"	DIM "E"	DIM "F"	P "A"	S "A"

TOLERANCE	APPROVALS	DATE
X.	DRAWN	
X.X ±0.30	DESIGNED	
X.XX ±0.20	CHECKED	
X.XXX ±0.10	APPROVED	
ANGULAR ±2°	DWG TYPE CST DWG	PROJECT CODE T521
UNLESS OTHERWISE SPECIFIED		

TITLE: ENERGY EDGE RECEPTACLE,DIP TYPE

UNIT: mm | SIZE: A3 | SCALE: NA | SHEET: 2 OF 3

Amphenol®
Amphenol Corporation
Amphenol Taiwan Corporation

PART No. GPCE2XXXXX1HR

DWG No. GPCE2X36241HR | REV. AX4

on the express condition that it is not to be disclosed, reproduced or used, in whole or in part, for manufacture or sale by anyone other than Amphenol Corporation without its prior consent, and that no right is granted to disclose or to use any information in this document.

The marking on this product doesn't contain environmental hazardous material and must follow one or more specifications per Material Specification SS-00259 for Sony GP compliant or per directive 2002/95/EC for RoHS compliant or per IEC 61249-2-21 for Halogen Free compliant.

PRELIMINARY RELEASE SUBJECT TO CHANGE

REVISIONS				
SYM	ECN No.	DESCRIPTION	DATE	BY
AX1		UNAPPROVED REVISION	09/28/2011	Chenny Yeh
AX2		ADD DATE CODE	10/12/2011	Chenny Yeh
AX3		MODIFIED P/N SYSTEM	12/01/2011	Chenny Yeh
AX4		ADD POST DIM	12/14/2011	Chenny Yeh

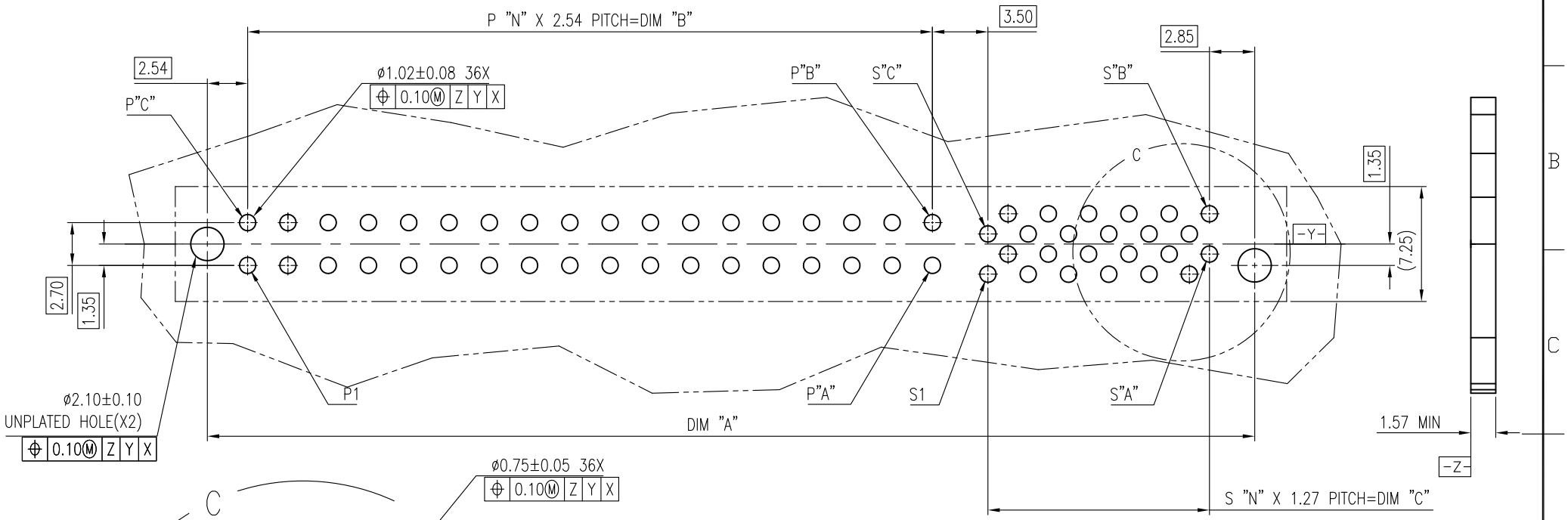

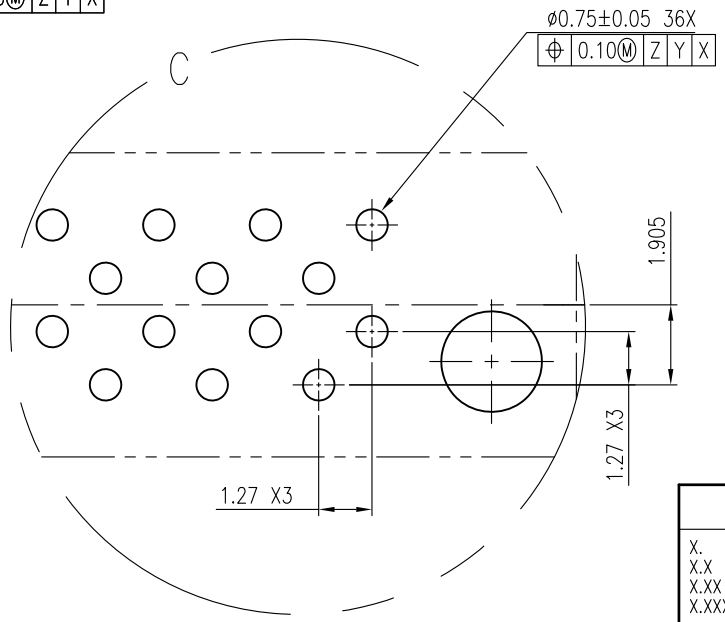

SCALE 8:1

GPCE3X56241HR	27	11	91.44	68.58	13.97	P24	P25	P56	S12	S13	S24
GPCE3X48121HR	23	5	73.66	58.42	6.35	P24	P25	P48	S6	S7	S12
GPCE3X36241HR	17	11	66.04	43.18	13.97	P18	P19	P36	S12	S13	S24
GPCE3X08201HR	3	9	27.94	7.62	11.43	P4	P5	P8	S10	S11	S20
PART NUMBER	P "N"	S "N"	DIM "A"	DIM "B"	DIM "C"	P "A"	P "B"	P "C"	S "A"	S "B"	S "C"

TOLERANCE	APPROVALS	DATE
X.	DRAWN	
X.X ±0.30	DESIGNED	
X.XX ±0.20	CHECKED	
X.XXX ±0.10	APPROVED	
ANGULAR ±2°	DWG TYPE CST DWG	PROJECT CODE T521
UNLESS OTHERWISE SPECIFIED		

TITLE: ENERGY EDGE RECEPTACLE,DIP TYPE

Amphenol ®
Amphenol Corporation
Amphenol Taiwan Corporation

UNIT	SIZE	PART No.
mm	A3	GPCE2XXXXX1HR
SCALE NA	SHEET 3 OF 3	DWG No. GPCE2X36241HR — REV. AX4